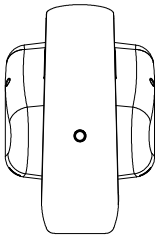

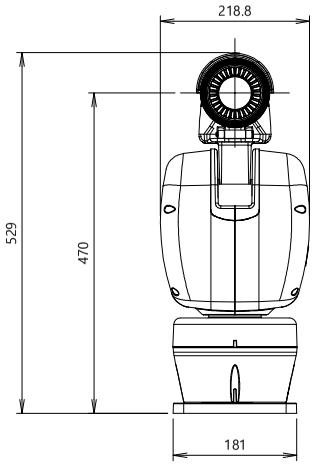

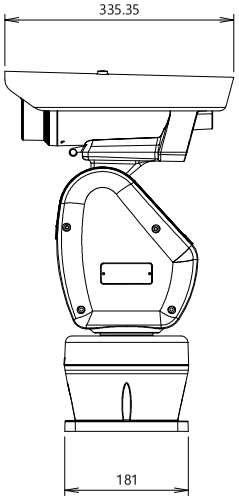

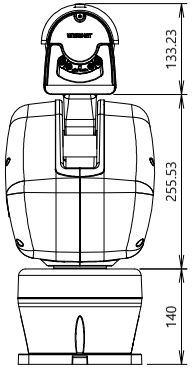

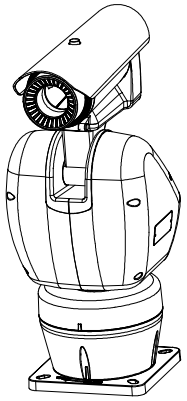

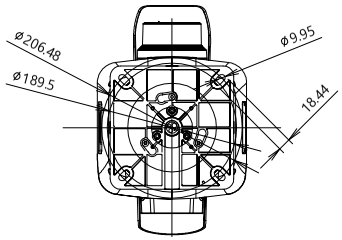

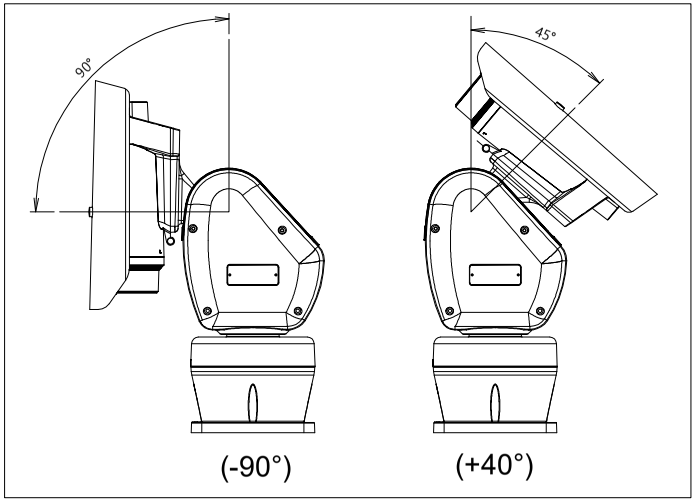

ITEM	PART NO.	DESCRIPTION	QT'Y	REM KS

GENERAL TOLERANCE/.			
DIM. \ CLA.	A	B	C
1 - 4	±0.05	±0.10	±0.25
4 - 16	±0.07	±0.20	±0.35
16 - 63	±0.10	±0.30	±0.50
63 - 250	±0.18	±0.55	±0.90
250 - 500	±0.30	±0.90	±1.50
500 - 1000	±0.50	±1.50	±2.50

FILE NAME	MATERIAL/材质	FINISH	DRW.NO/图号	
		NOTE 참조		

SCALE	UNIT	TOLERANCE	DESIGN	CHECK	APPROVE	DESCRIPTION 描述	외관도 EXTERNAL VIEW
1.000	MM						
DATE				/	/	MODEL NO./型号	TNU-4041T / 4051T
Hanwha Techwin						SIZE	A0	SHEET 1 OF 1